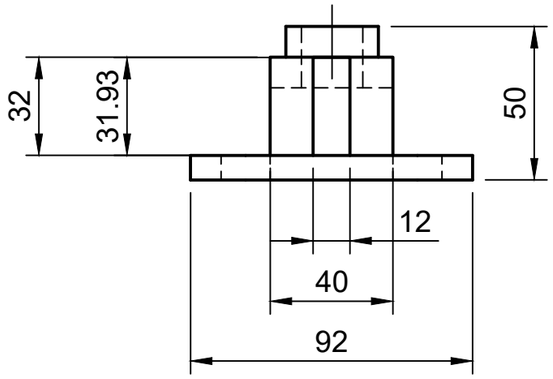

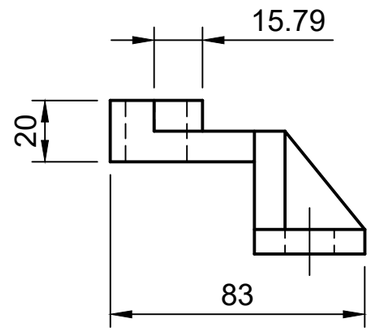

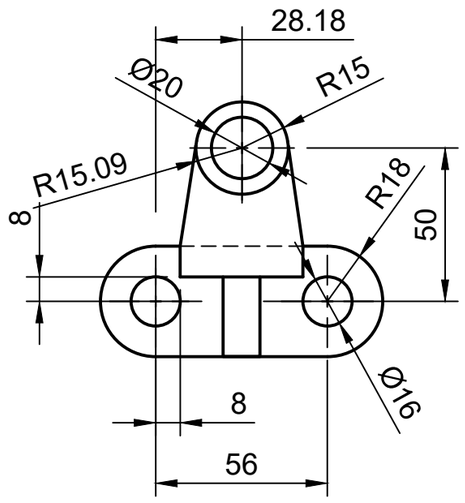

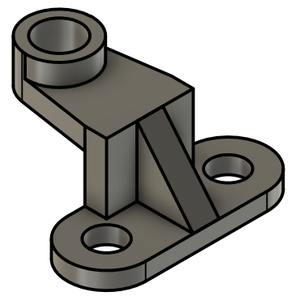

Dept.	Technical reference	Created by	Approved by
AIDS	25014014	IYYAPPAN S 10-03-2026	
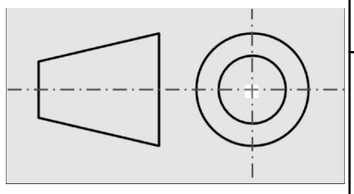		Document type	Document status: completed
		Title: 25014014-2.2	DWG No.
			Rev. / Date of issue / Sheet 1/1